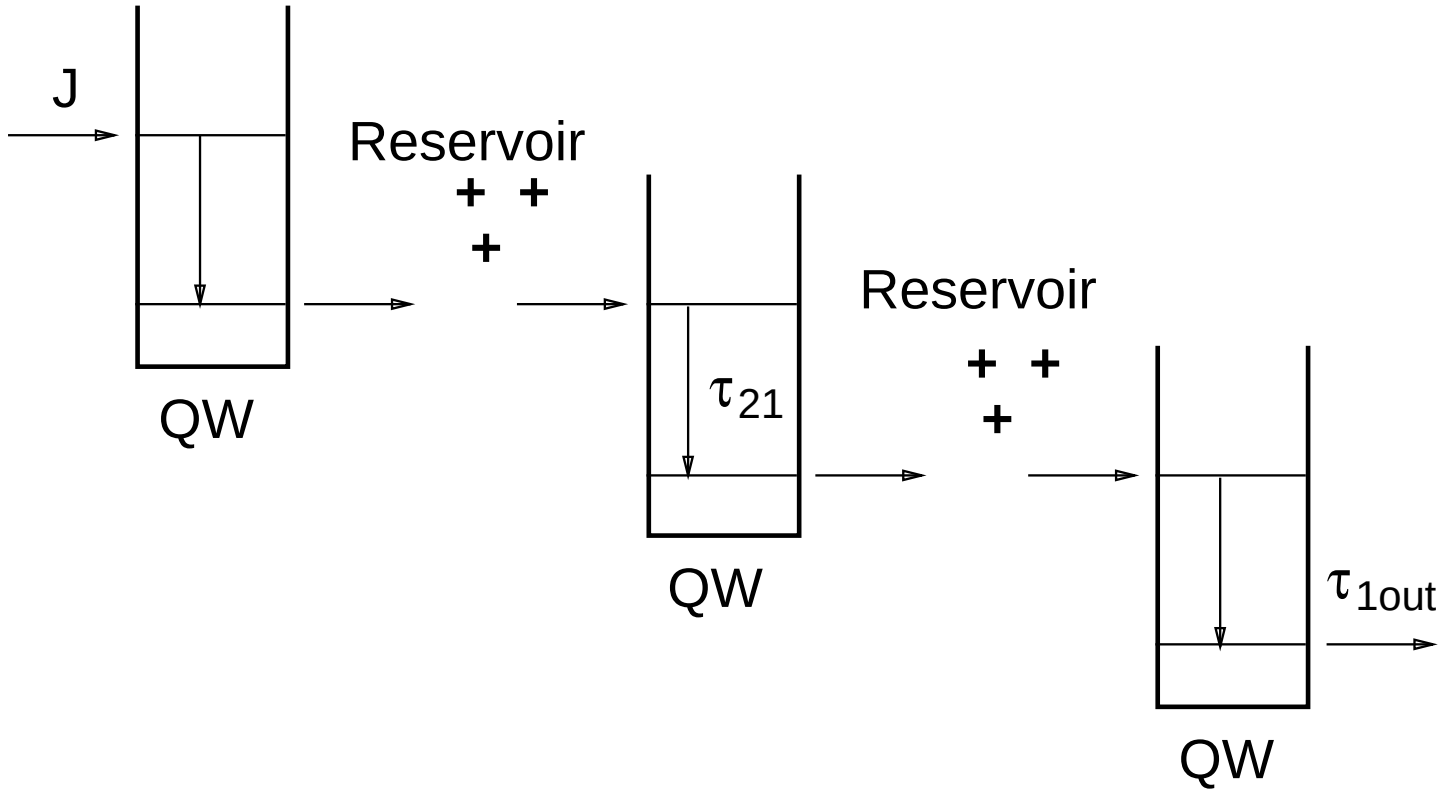
J
Reservoir
QW
τ_{21}
Reservoir
QW
τ_{1out}
QW